MOTOROLA

1.1 GHz Dual Modulus Prescaler

The MC12028A can be used with CMOS synthesizers requiring positive edges to trigger internal counters such as Motorola's MC145XXX series in a PLL to provide tuning signals up to 1.1 GHz in programmable frequency steps.

The MC12028B can be used with CMOS synthesizers requiring negative edges to trigger internal counters.

A Divide Ratio Control (SW) permits selection of a 32/33 or 64/65 divide ratio as desired.

The Modulus Control (MC) selects the proper divide number after SW has been biased to select the desired divide ratio.

NOTE: The "B" Version Is Not Recommended for New Designs

- 1.1 GHz Toggle Frequency
- MC12028A for Positive Edge Triggered Synthesizers
- 6.5 mA Maximum, –40 to 85°C, V_{CC} = 5.5 Vdc
- Modulus Control Input Level Is Compatible With Standard CMOS and TTL
- Low–Power 4.0 mA Typical

FUNCTIONAL TABLE

SW	MC	Divide Ratio
H	H	32
H	L	33
L	H	64
L	L	65

NOTES: 1. SW: H = V_{CC}, L = Open. A logic L can also be applied by grouunding this pin, but this is not recommended due to increased power soncumption.
2. MC: H = 2.0 V to V_{CC}, L = GND to 0.8 V.

DESIGN GUIDE

Criteria	Value	Unit
Internal Gate Count*	67	ea
Internal Gate Propagation Delay	200	ps
Internal Gate Power Dissipation	0.75	mW
Speed Power Product	0.15	pJ

NOTE: * Equivalent to a two–input NAND gate

MAXIMUM RATINGS

Characteristic	Symbol	Range	Unit
Power Supply Voltage, Pin 2	V_{CC}	–0.5 to 7.0	Vdc
Operating Temperature Range	T_A	–40 to 85	°C
Storage Temperature Range	T_{stg}	–65 to 150	°C
Modulus Control Input, Pin 6	MC	–0.5 to 6.5	Vdc

NOTE: ESD data available upon request.

MC12028A
MC12028B

MECL PLL COMPONENTS
÷64/65, ÷128/129
DUAL MODULUS PRESCALER

SEMICONDUCTOR TECHNICAL DATA

D SUFFIX
PLASTIC PACKAGE
CASE 751
(SO–8)

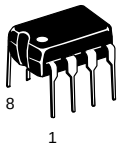

P SUFFIX
PLASTIC PACKAGE
CASE 626

PIN CONNECTIONS

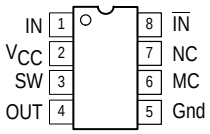

(Top View)

ORDERING INFORMATION

Device	Operating Temp Range	Package
MC12028AD	T_A =–40° to +85°C	SO–8
MC12028AP		Plastic
MC12028BD		SO–8
MC120228BP		Plastic

ELECTRICAL CHARACTERISTICS (V_{CC} = 4.5 to 5.5V; T_A = –40 to 85°C, unless otherwise noted.)

Characteristic	Symbol	Min	Typ	Max	Unit
Toggle Frequency (Sine Wave Input)	f_t	0.1	1.4	1.1	GHz
Supply Current Output Unloaded (Pin 2)	I_{CC}	–	4.0	6.5	mA
Modulus Control Input High (MC)	V_{IH1}	2.0	–	V_{CC}	V
Modulus Control Input Low (MC)	V_{IL1}	–	–	0.8	V
Divide Ratio Control Input High (SW)	V_{IH2}	V_{CC}	V_{CC}	V_{CC}	Vdc
Divide Ratio Control Input Low (SW)	V_{IL2}	Open	Open	Open	—
Output Voltage Swing (C_L = 12 pF; R_L = 2.2 kΩ)	V_{out}	1.0	1.6		V_{pp}
Modulus Setup Time MC to Out	t_{set}	–	11	16	ns
Input Voltage Sensitivity 250–1100 MHz 100–250 MHz	V_{in}	100 400	– –	1500 1500	mVpp
Output Current (C_L = 12 pF; R_L = 2.2 kΩ)	I_O	–	1.5	4.0	mA

Figure 1. Logic Diagram (MC12028A)

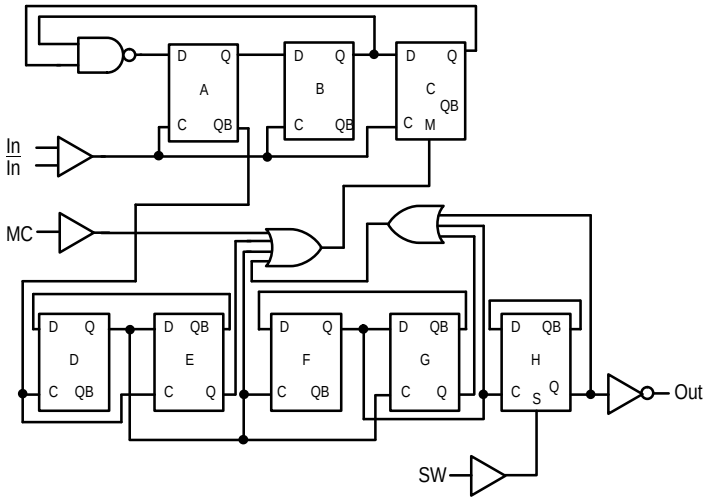

Figure 2. Modulus Setup Time

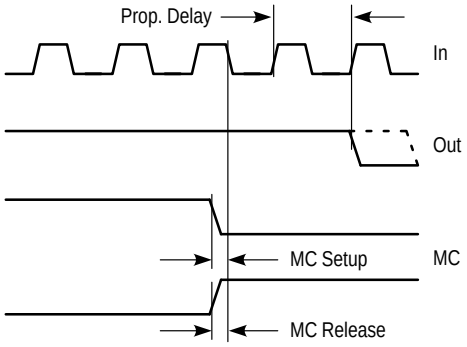

Modulus setup time MC to out is the MC setup or MC release plus the prop delay.

Figure 3. Typical Output Waveform

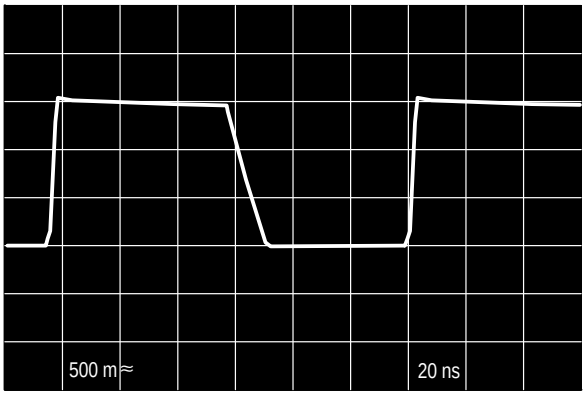

Figure 4. AC Test Circuit

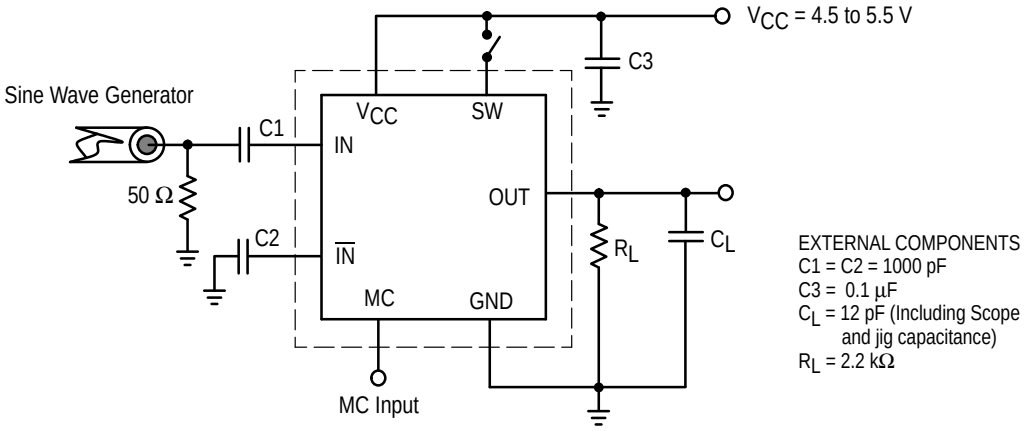

Figure 5. Typical Input Impedance versus Input Frequency

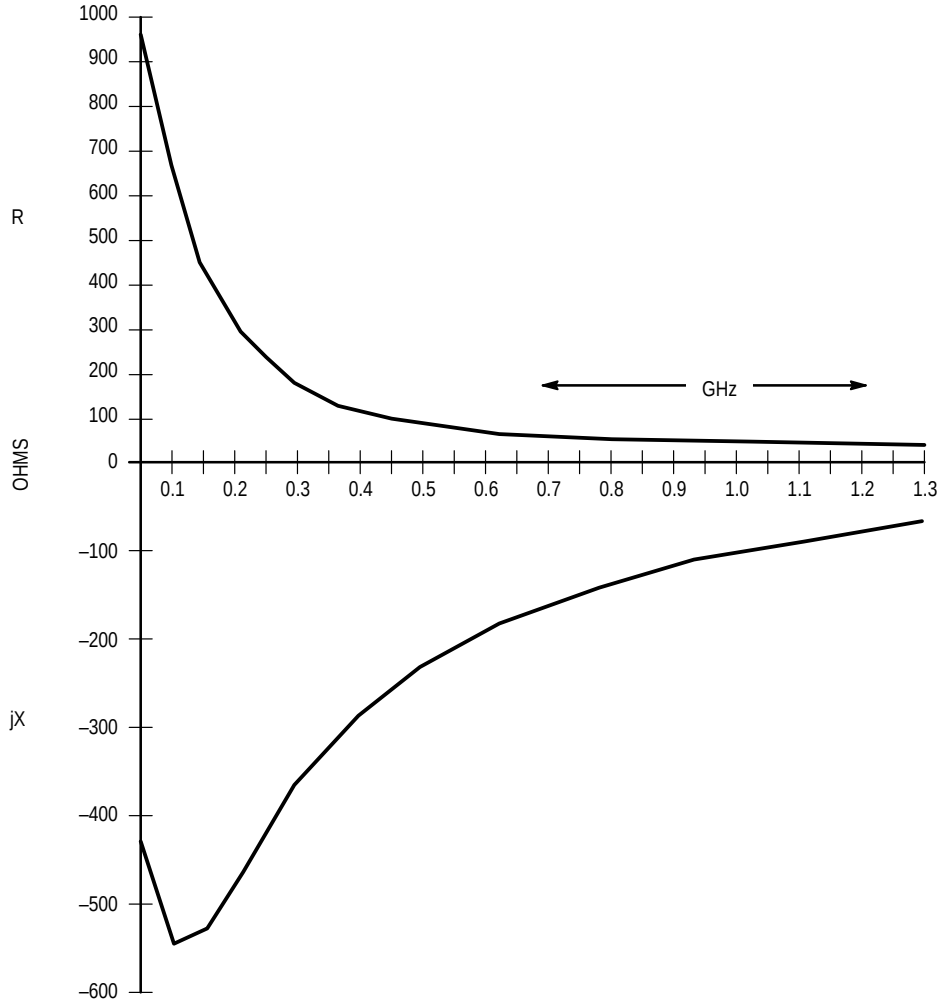

Figure 6. Input Signal Amplitude versus Input Frequency

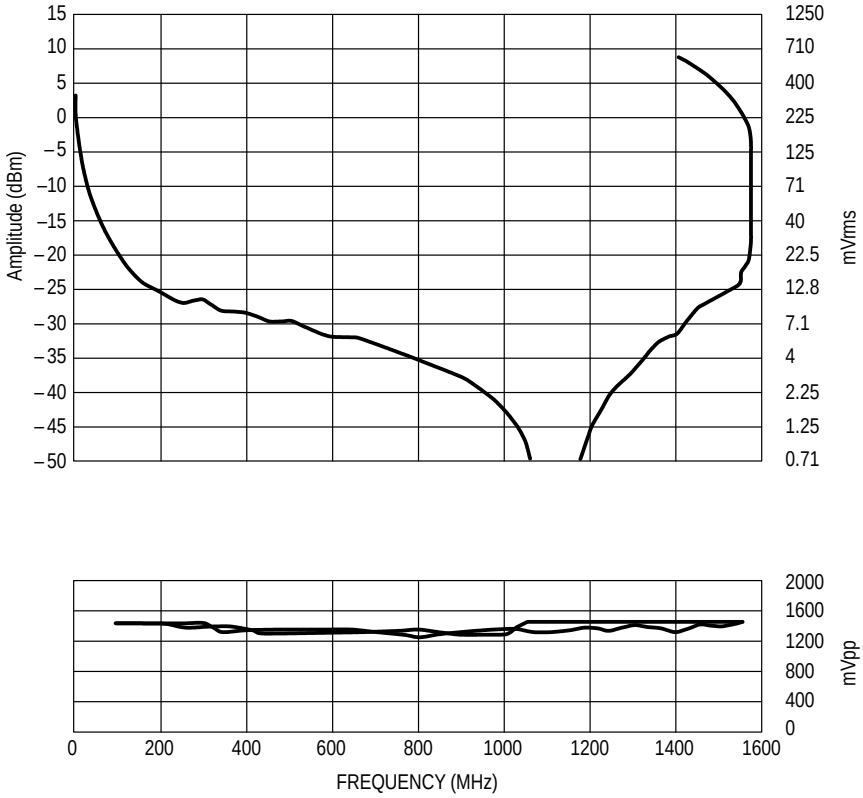

Divide Ratio = 32

OUTLINE DIMENSIONS

P SUFFIX
PLASTIC PACKAGE
CASE 626–05
ISSUE K

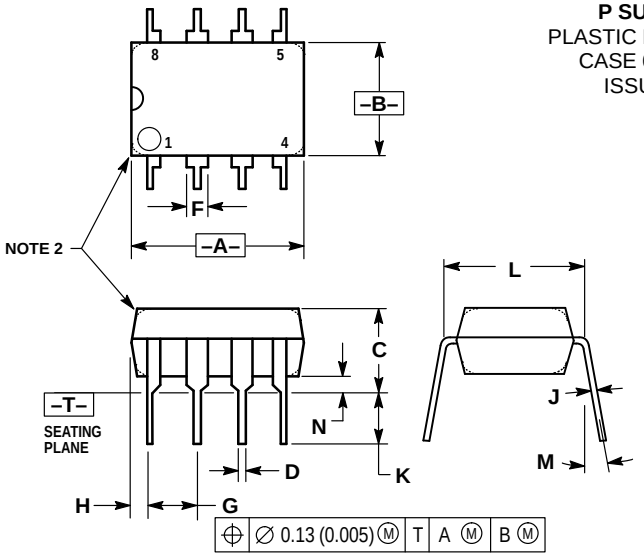

NOTES:
1. DIMENSION L TO CENTER OF LEAD WHEN FORMED PARALLEL.
2. PACKAGE CONTOUR OPTIONAL (ROUND OR SQUARE CORNERS).
3. DIMENSIONING AND TOLERANCING PER ANSI Y14.5M, 1982.

	MILLIMETERS		INCHES	
DIM	MIN	MAX	MIN	MAX
A	9.40	10.16	0.370	0.400
B	6.10	6.60	0.240	0.260
C	3.94	4.45	0.155	0.175
D	0.38	0.51	0.015	0.020
F	1.02	1.78	0.040	0.070
G	2.54 BSC		0.100 BSC	
H	0.76	1.27	0.030	0.050
J	0.20	0.30	0.008	0.012
K	2.92	3.43	0.115	0.135
L	7.62 BSC		0.300 BSC	
M	—	10°	—	10°
N	0.76	1.01	0.030	0.040

D SUFFIX
PLASTIC PACKAGE
CASE 751–06
(SO–8)
ISSUE T

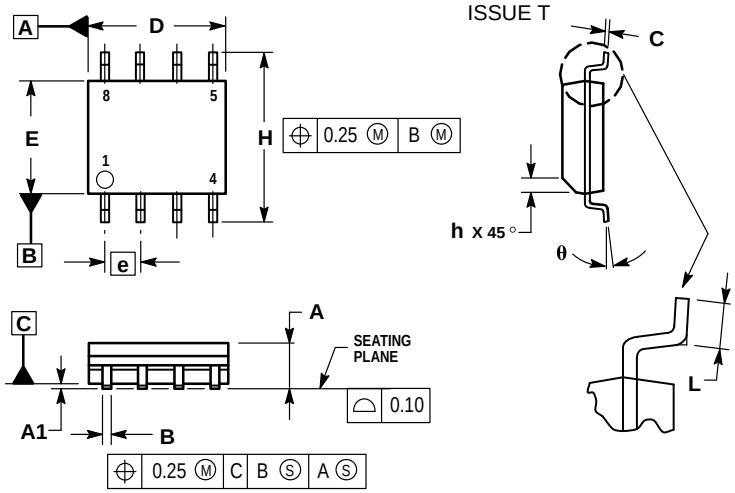

NOTES:
1. DIMENSIONING AND TOLERANCING PER ASME Y14.5M, 1994.
2. DIMENSIONS ARE IN MILLIMETER.
3. DIMENSION D AND E DO NOT INCLUDE MOLD PROTRUSION.
4. MAXIMUM MOLD PROTRUSION 0.15 PER SIDE.
5. DIMENSION B DOES NOT INCLUDE DAMBAR PROTRUSION. ALLOWABLE DAMBAR PROTRUSION SHALL BE 0.127 TOTAL IN EXCESS OF THE B DIMENSION AT MAXIMUM MATERIAL CONDITION.

	MILLIMETERS	
DIM	MIN	MAX
A	1.35	1.75
A1	0.10	0.25
B	0.35	0.49
C	0.19	0.25
D	4.80	5.00
E	3.80	4.00
e	1.27 BSC	
H	5.80	6.20
h	0.25	0.50
L	0.40	1.25
θ	0°	7°

How to reach us:
USA / EUROPE / Locations Not Listed: Motorola Literature Distribution;
P.O. Box 5405, Denver, Colorado 80217. 1–303–675–2140 or 1–800–441–2447

JAPAN: Nippon Motorola Ltd.: SPD, Strategic Planning Office, 141,
4–32–1 Nishi–Gotanda, Shagawa–ku, Tokyo, Japan. 03–5487–8488

Customer Focus Center: 1–800–521–6274

Mfax™: RMFAX0@email.sps.mot.com – TOUCHTONE 1–602–244–6609
Motorola Fax Back System – US & Canada ONLY 1–800–774–1848
– http://sps.motorola.com/mfax/

ASIA / PACIFIC: Motorola Semiconductors H.K. Ltd.; 8B Tai Ping Industrial Park,
51 Ting Kok Road, Tai Po, N.T., Hong Kong. 852–26629298

HOME PAGE: http://motorola.com/sps/